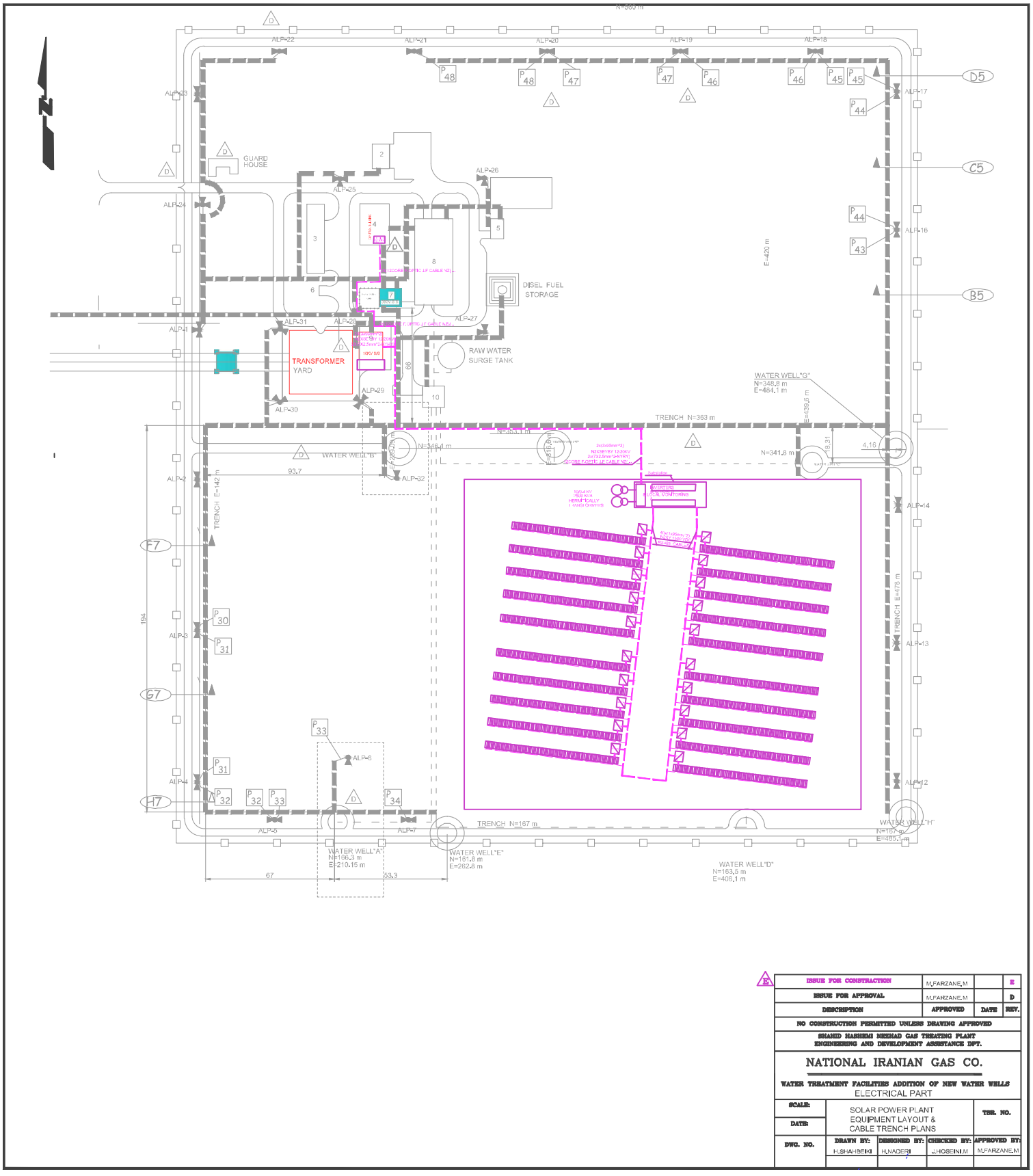


| E | ISSUE FOR CONSTRUCTION | M.FARZANE.M | | E |
|---|---|---|---|---|
| | ISSUE FOR APPROVAL | M.FARZANE.M | | D |
| | DESCRIPTION | APPROVED | DATE | REV. |

NO CONSTRUCTION PERMITTED UNLESS DRAWING APPROVED

SHAHID HASHEMI NEZHAD GAS TREATING PLANT
ENGINEERING AND DEVELOPMENT ASSISTANCE DPT.

# NATIONAL IRANIAN GAS CO.

WATER TREATMENT FACILITIES ADDITION OF NEW WATER WELLS
ELECTRICAL PART

| SCALE: | SOLAR POWER PLANT EQUIPMENT LAYOUT & CABLE TRENCH PLANS | | | TSR. NO. |
|---|---|---|---|---|
| DATE: | | | | |
| DWG. NO. | DRAWN BY: | DESIGNED BY: | CHECKED BY: | APPROVED BY: |
| | H.SHAHBEIKI | H.NADERI | A.HOSEINI.M | M.FARZANE.M |

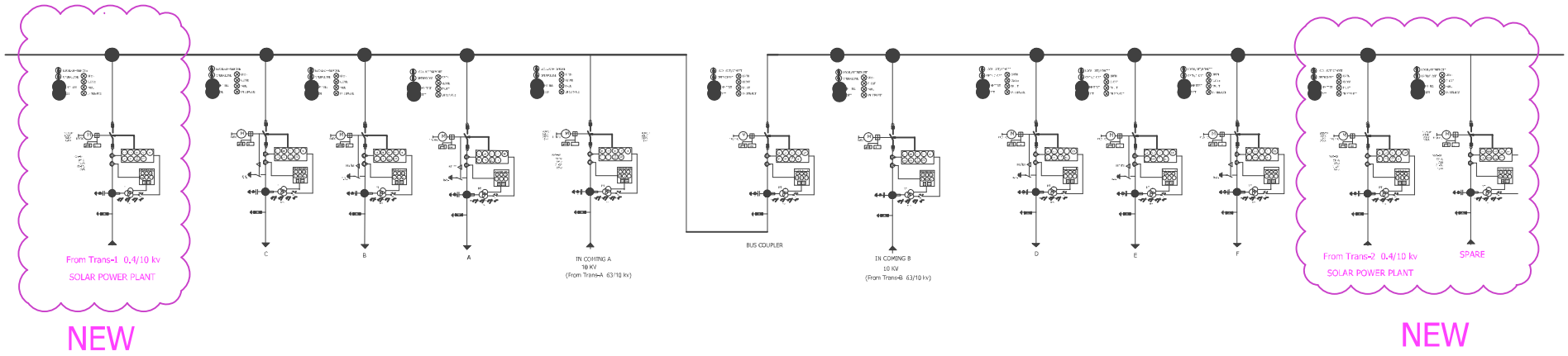


NEW

NEW

# 10 KV SWITCHGEAR SINGLE LINE DIAGRAM

## WATER TREATMENT FACILITIES