Material for 5 MW station		
SPECIFICSTION	**SECTION**	**MINIMUM PILING DEPTH**
Rear Pile	UPA120	1500
Front Pile	UPA120	1200

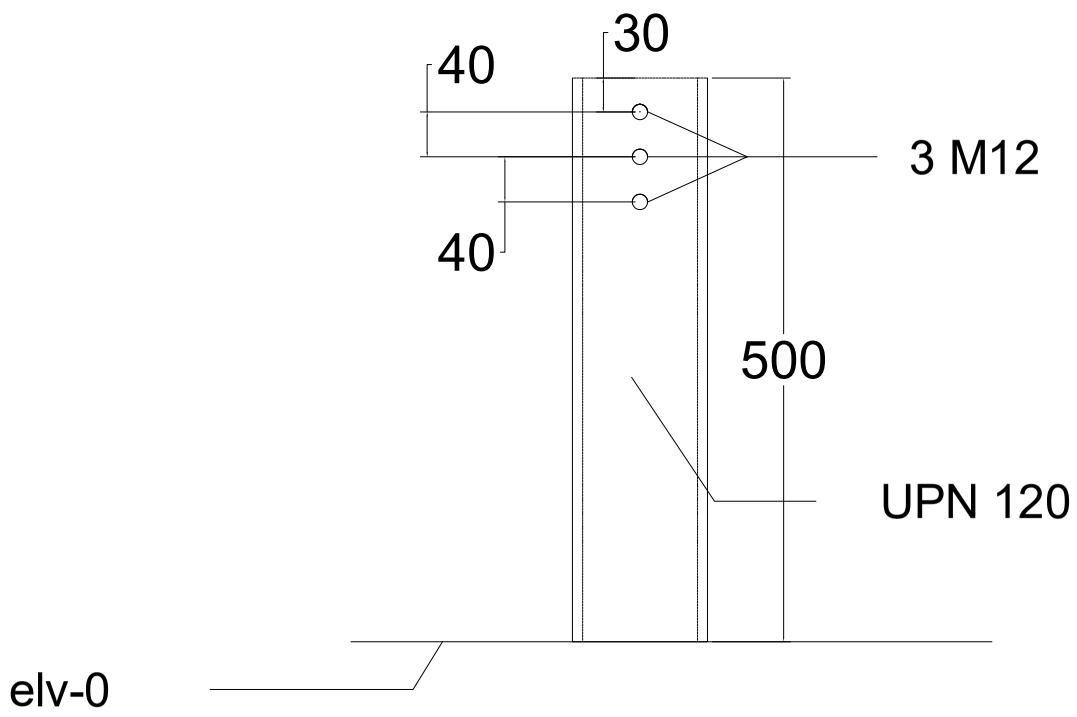

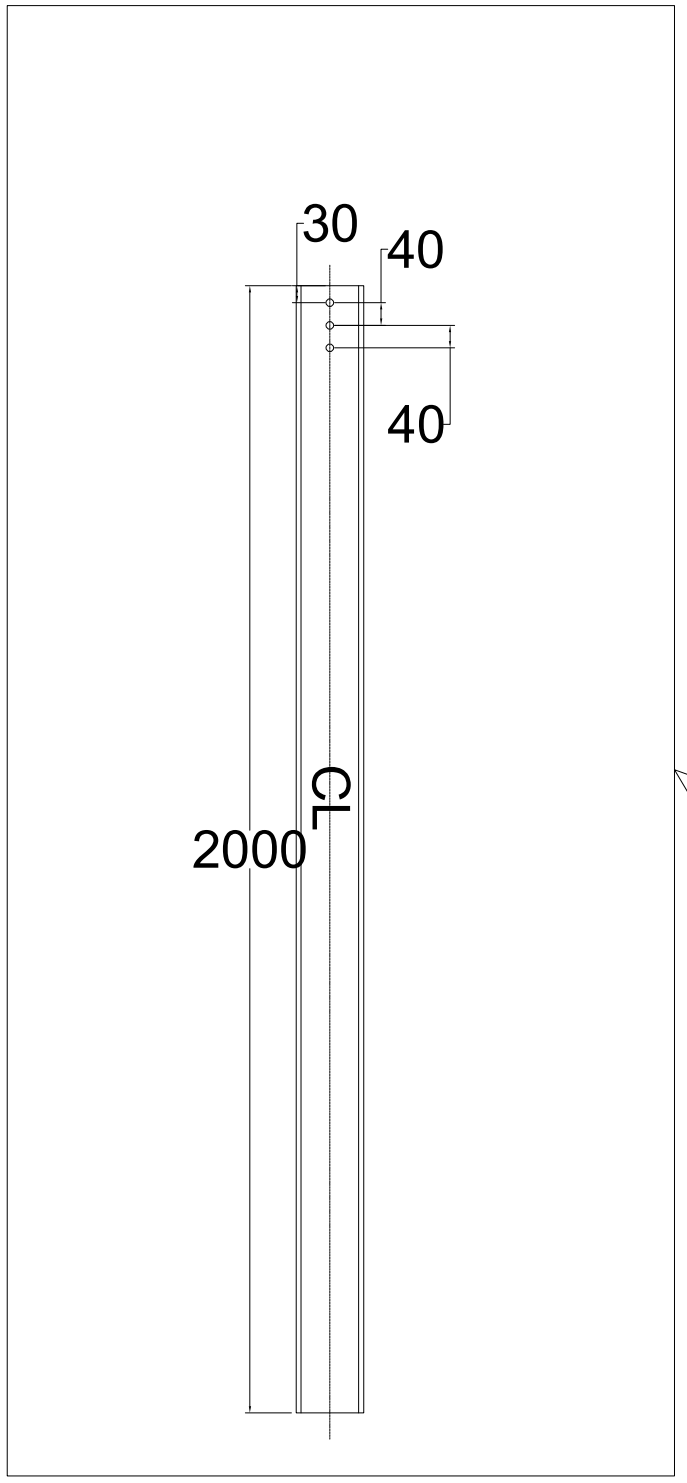

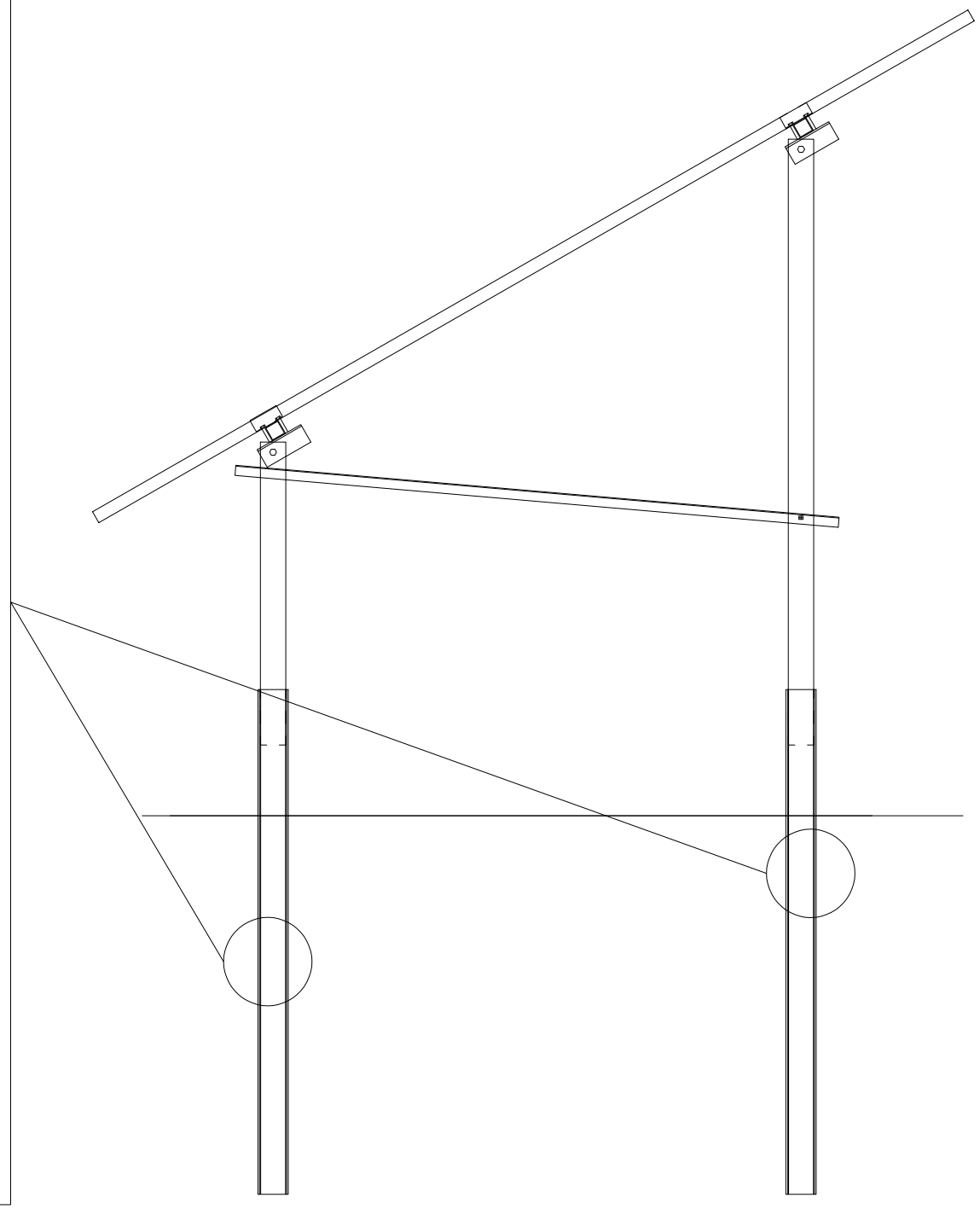

شرکت مهندسی انتقال نیرو و مخابرات شرق

Project Name: 5 MW SOLAR PV STRUCTURE NEHBANDAN	SUP			05		
	CHE			04		
				03		
Drawing Title: 2x20 -STRUCTURE DRAWING	DRN			02		
				01	08/01/2026	
	SCALE	1:100	PAGE 10 /16	REV	DATE	REMARK